ELEC217 - Electric Virtual Prototype Builds

MSD (CAD) Inventor

1. File New > New > Standard *.ipt.
2. Start 2D Sketch.
3. Select - Horizontal plane – Sketch 1.
4. Draw a rectangle 86 mm x 61 mm (use tab key to input sizes).

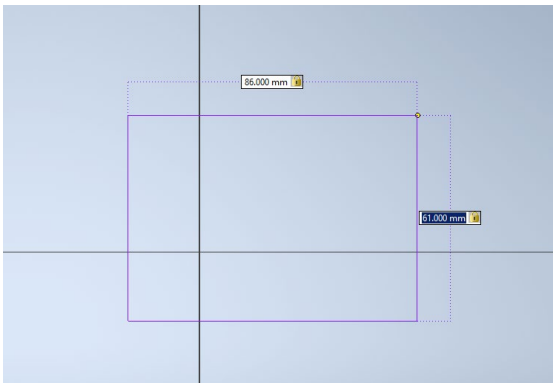

5. 3D Model (tab).
6. Extrude – Distance 5 mm.

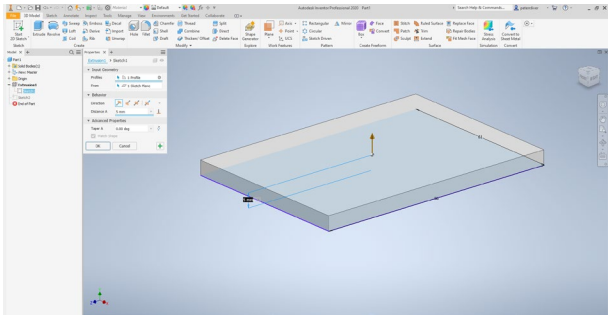

7. Select TOP – Start 2D sketch.
8. Add x4 squares 10x10 mm – X – using Line tool through each square. Trim to a centre point triangle.

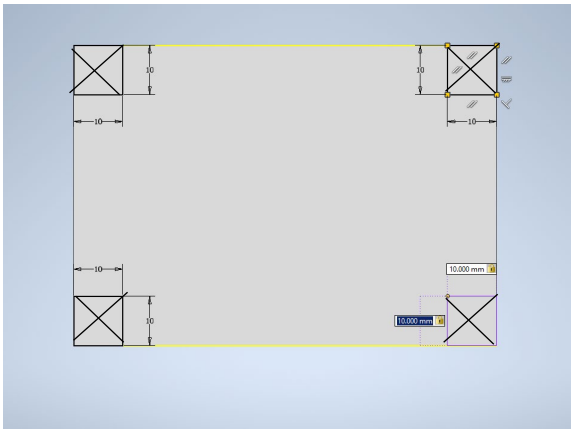

9. 3D Model – Hole.

OGL National Composite Centre 2022
This ELEC217 Electric Virtual Prototype Builds content is licensed under the Open Government Licence 3.0

10. x4 points selected on each square.
    - Simple hole.
    - Seat – None.
    - Distance – 6 mm Dia.

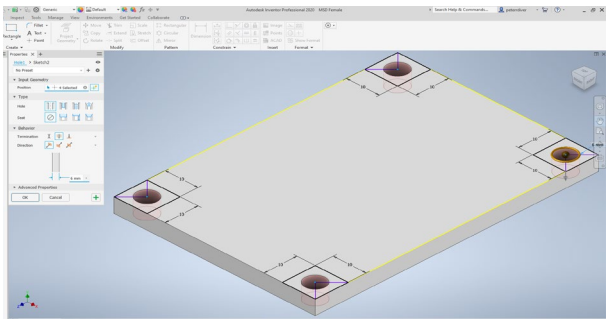

11. 3D Model – Fillet.
12. X4 selected edges – 6 mm radius.

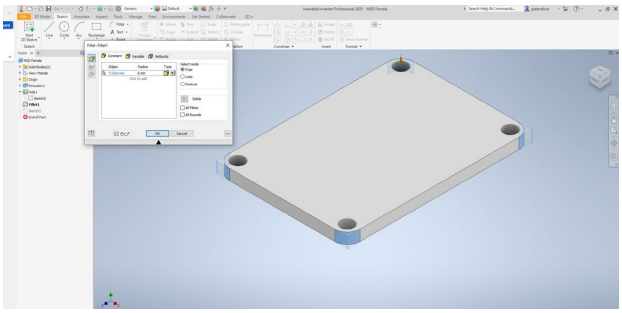

13. Draw a box 10 mm in from each edge.

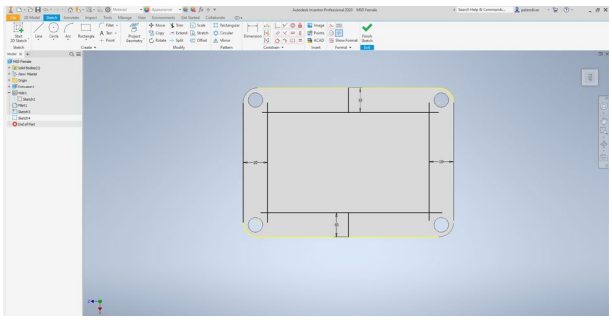

14. Using the Sketch > Trim tool – tidy up the lines.

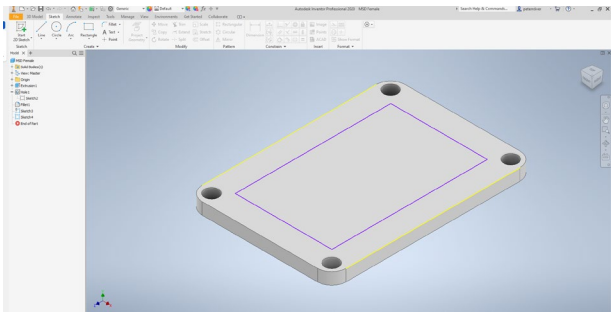

15. Using the Sketch > Fillet tool – round the corners.

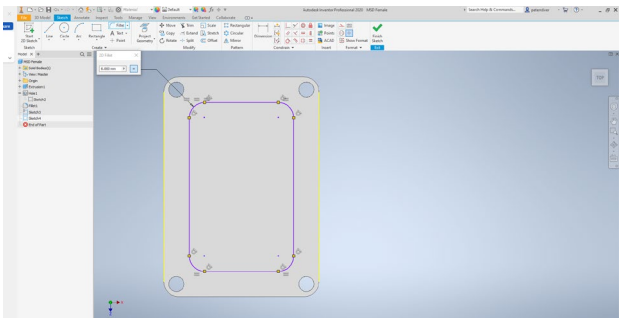

OGL National Composite Centre 2022
This ELEC217 Electric Virtual Prototype Builds content is licensed under the Open Government Licence 3.0

16. Using the Sketch > Offset tool – Internal – add 2 mm.

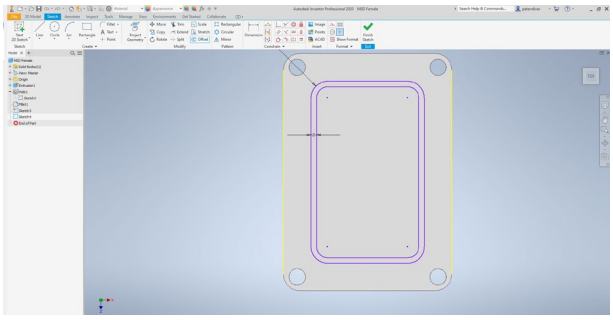

17. Using Sketch > (Centre lines) Line – (6 mm and 20 mm) – Circle and Offset (1 and 2 mm on HVIL).

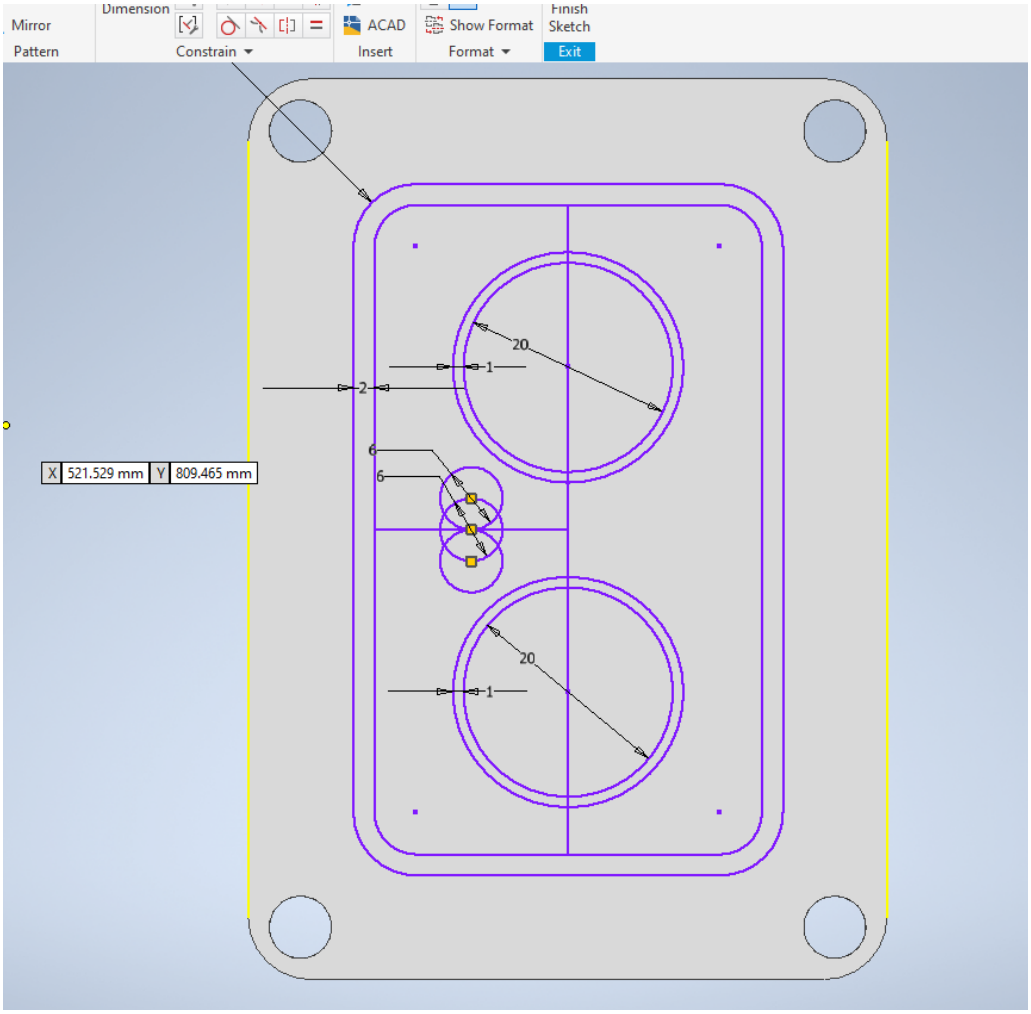

OGL National Composite Centre 2022
This ELEC217 Electric Virtual Prototype Builds content is licensed under the Open Government Licence 3.0

18. Using Sketch > Line and Trim – tidy up the HVIL and the DC Connector guides.

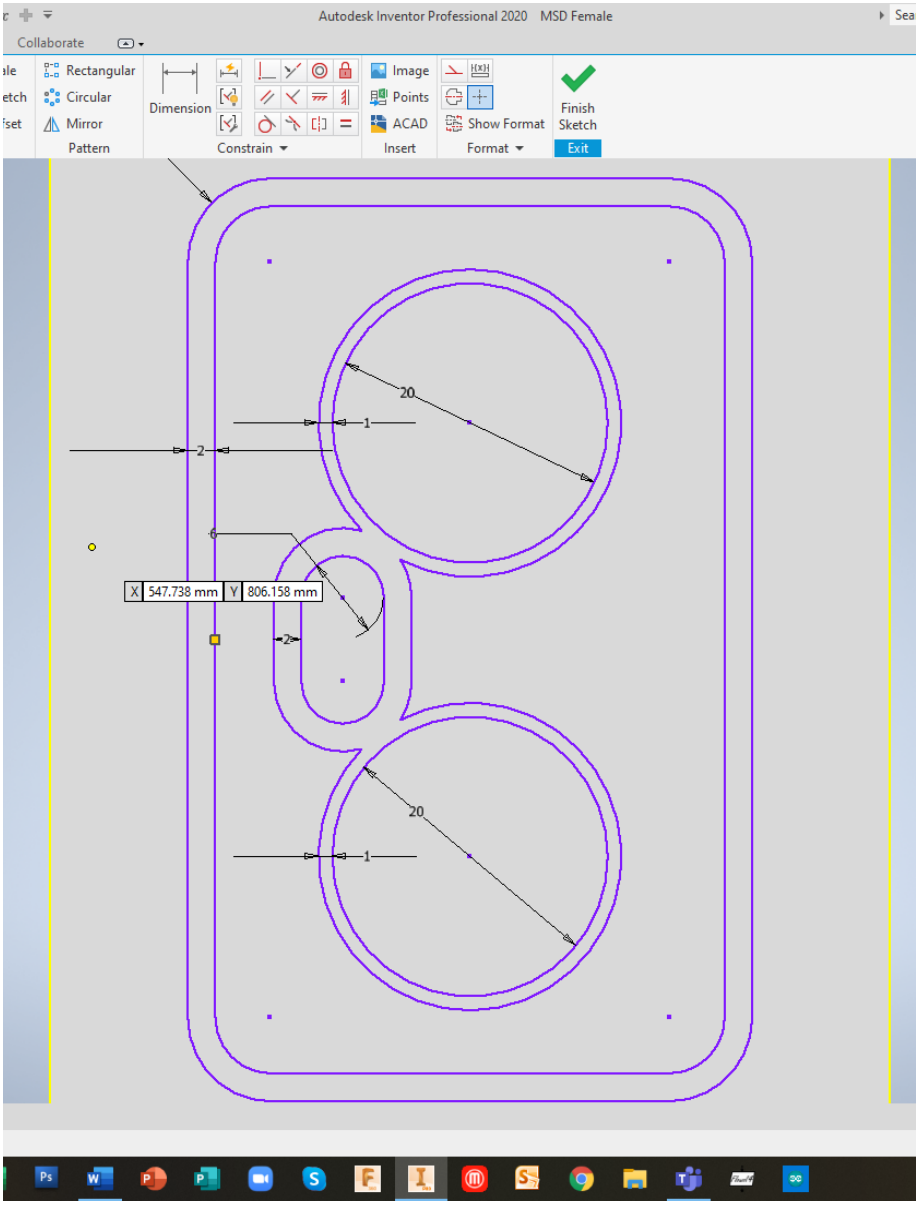

19. Using 3D Model > Extrude – select the outer and inner – extrude 40 mm.

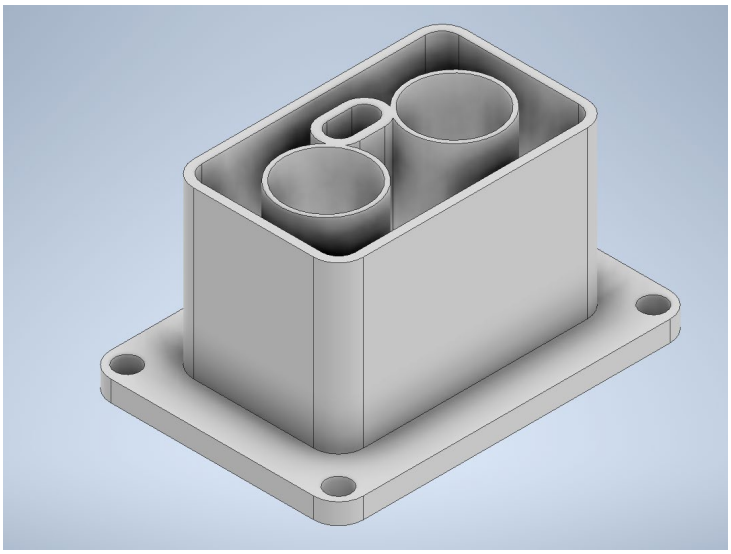

OGL National Composite Centre 2022
This ELEC217 Electric Virtual Prototype Builds content is licensed under the Open Government Licence 3.0

20. Select the TOP face – using Sketch > Rectangle – draw a box inside the confines of the middle section.

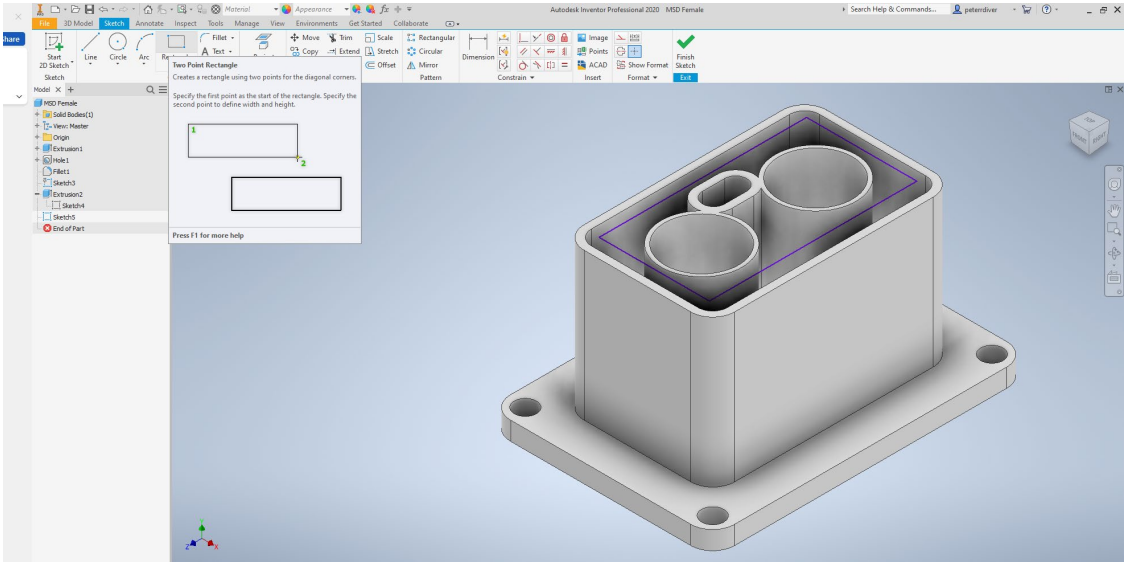

21. Using 3D Model > Extrude – Direction below – Distance 10 mm – Boolean cut – reduce the height of the middle section by 10 mm.

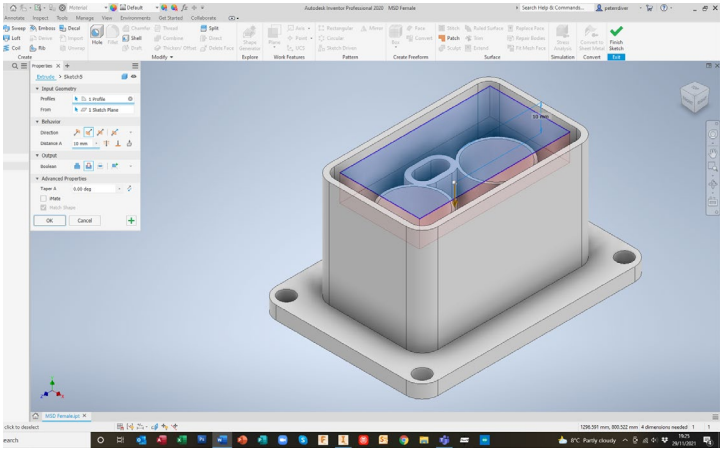

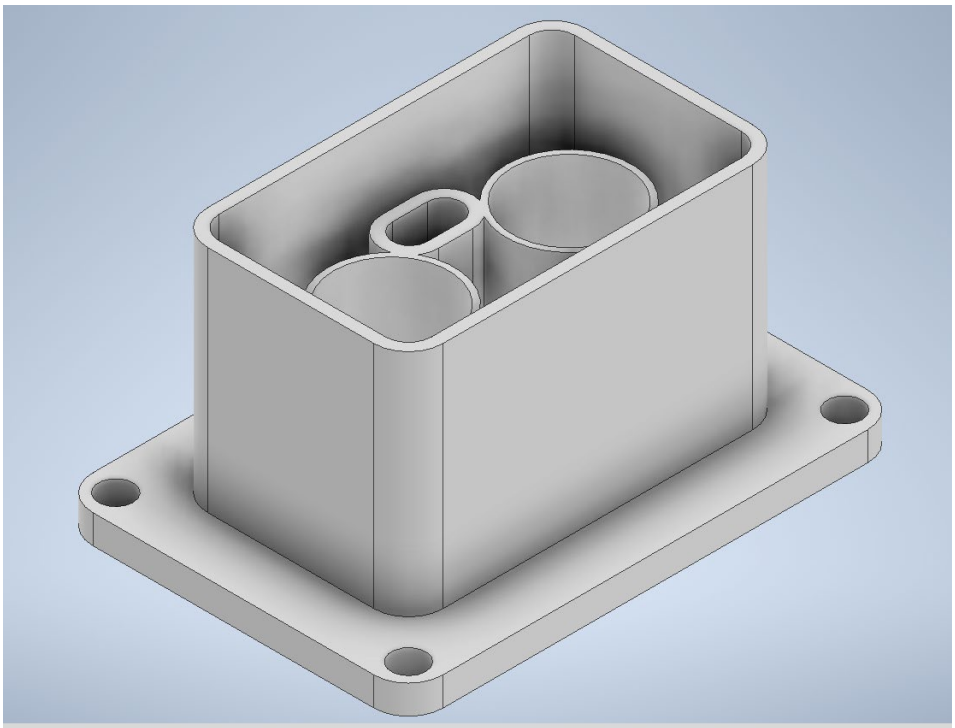

OGL National Composite Centre 2022
This ELEC217 Electric Virtual Prototype Builds content is licensed under the Open Government Licence 3.0

22. Using 3D Model > Chamfer – on the inside edge – 2 mm and 30 degrees.

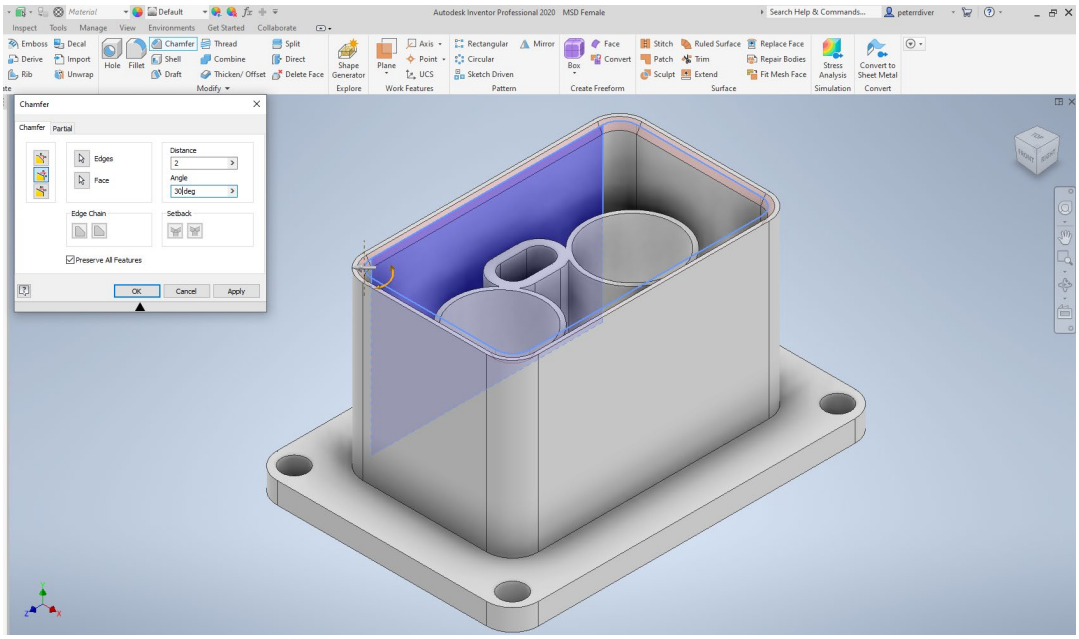

23. To create the DC Posts – draw x2 10 mm Circles inside of the 20 mm guides.

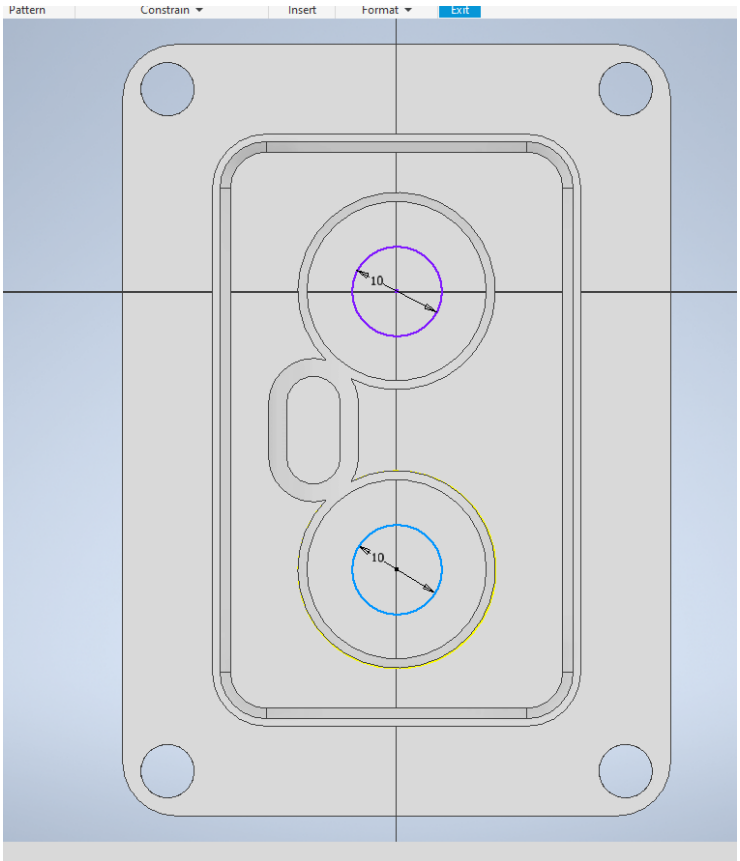

OGL National Composite Centre 2022
This ELEC217 Electric Virtual Prototype Builds content is licensed under the Open Government Licence 3.0

24. Using 3D Model > Extrude – raise the pins 30 mm.

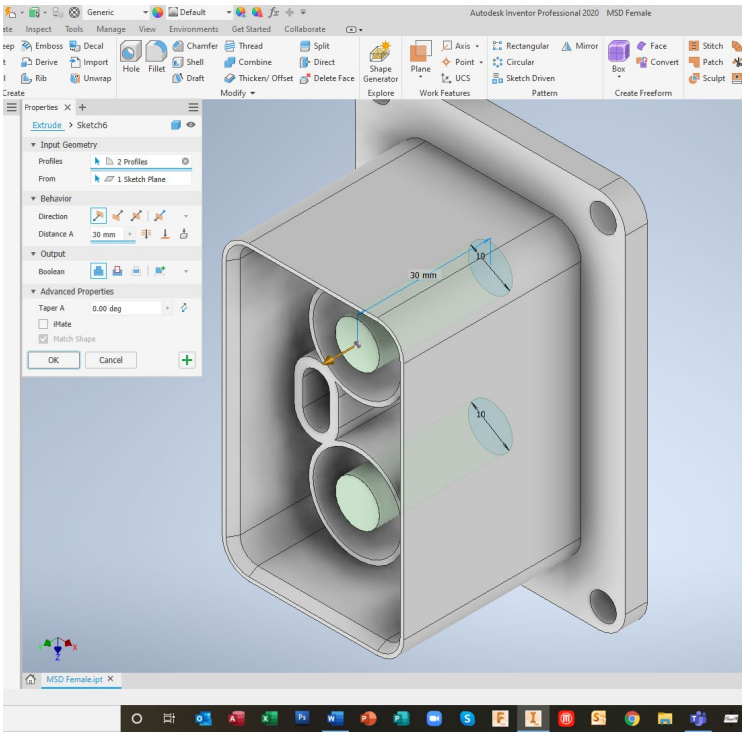

25. Chamfer the edges of the pins 1.5 mm.

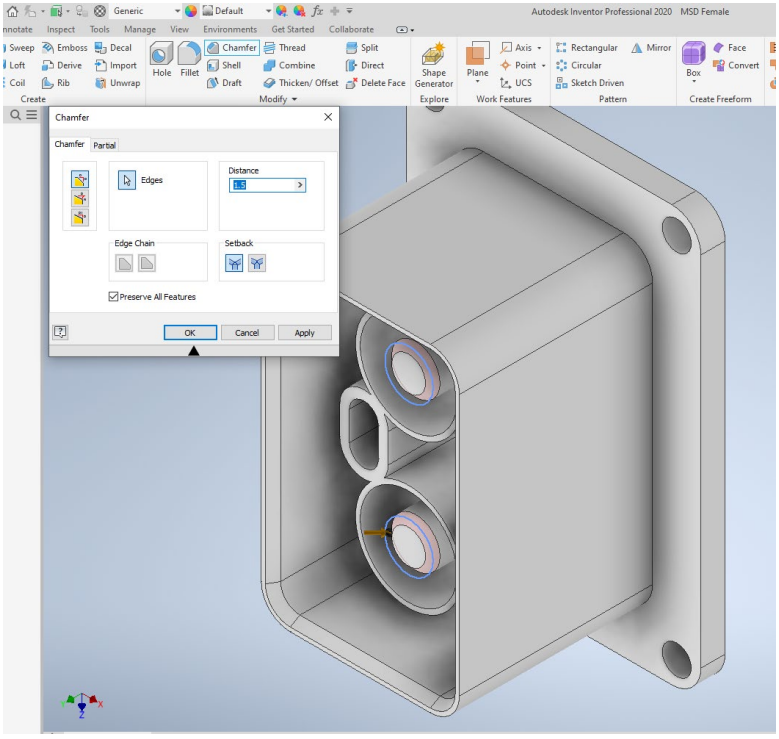

OGL National Composite Centre 2022
This ELEC217 Electric Virtual Prototype Builds content is licensed under the Open Government Licence 3.0

26. Define materials at the top – PET Plastic/Orange. Pins and bolt throughs can be silver, etc.

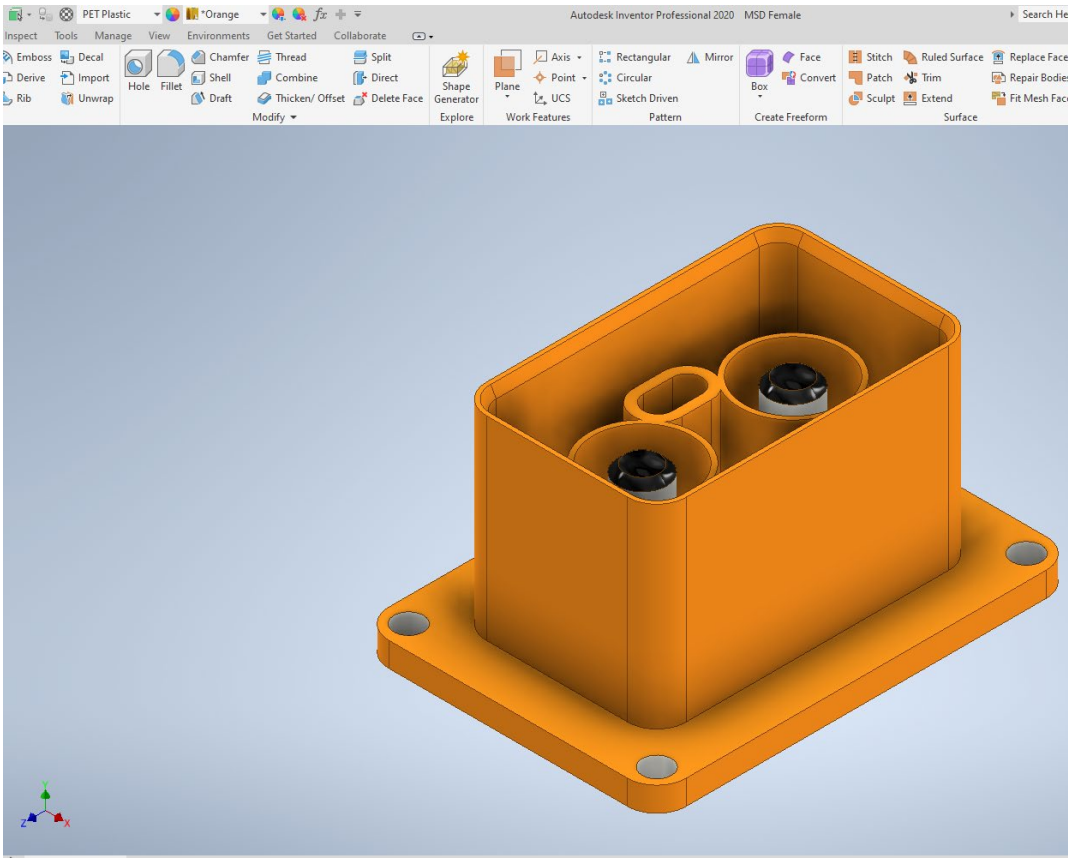

27. The TOP is now complete. On the bottom – draw a Centre Line and x3 25 mm Circles.

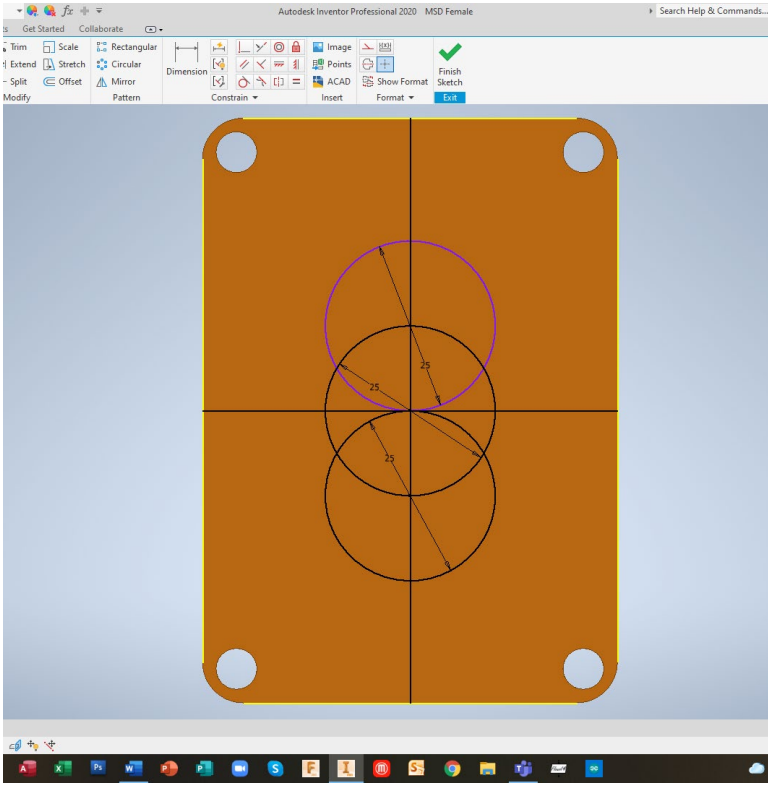

OGL National Composite Centre 2022
This ELEC217 Electric Virtual Prototype Builds content is licensed under the Open Government Licence 3.0

28. Using Line and Trim – tidy up the bottom pin carriage.

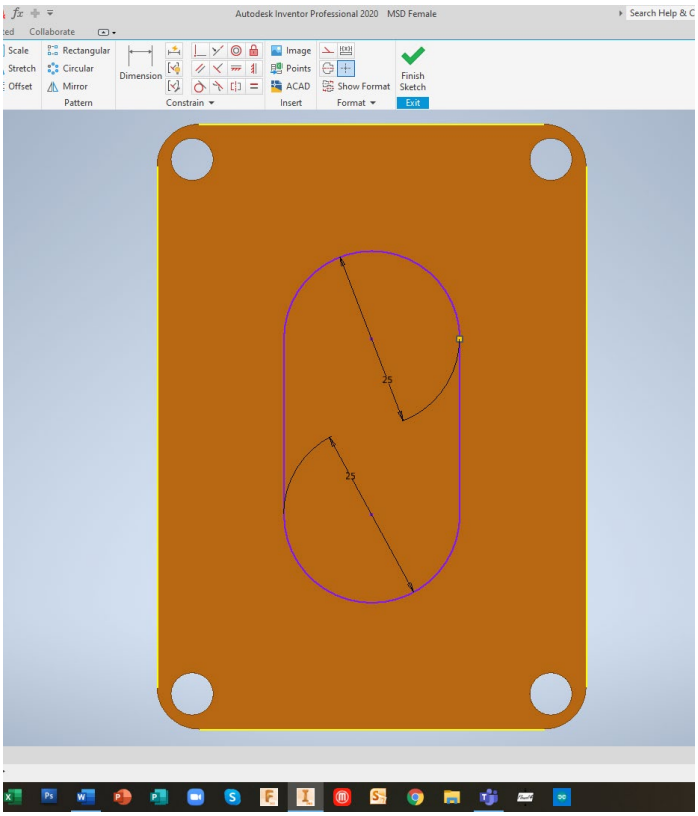

29. Using 3D Model > Extrude – 10 mm.

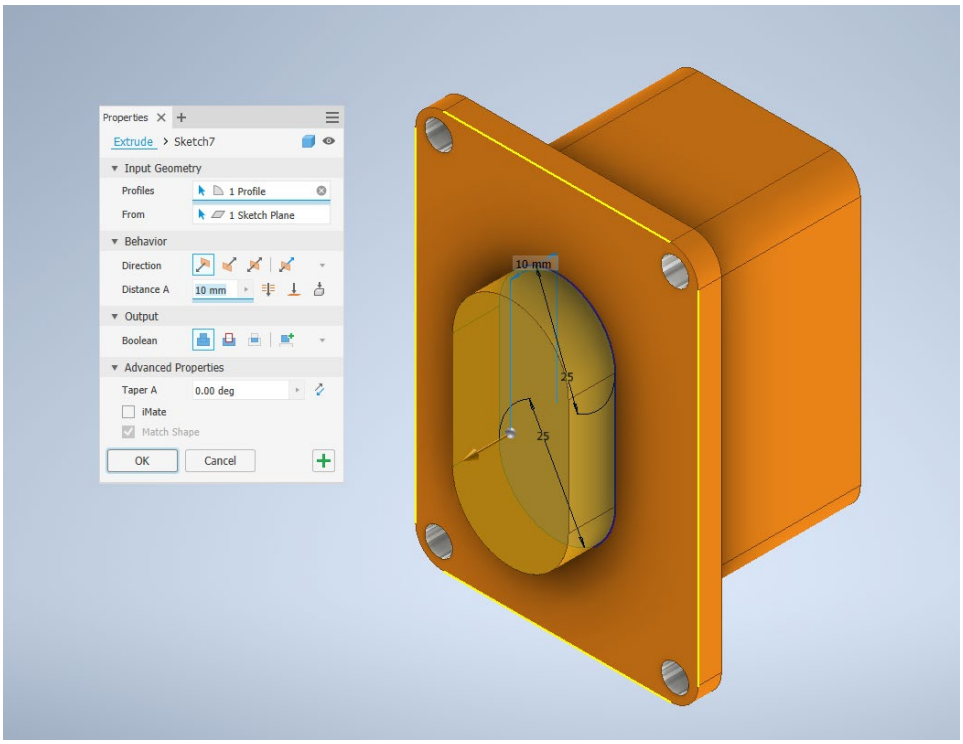

OGL National Composite Centre 2022
This ELEC217 Electric Virtual Prototype Builds content is licensed under the Open Government Licence 3.0

30. Raised off the surface – draw a 2 mm T section – 20 mm extrude.

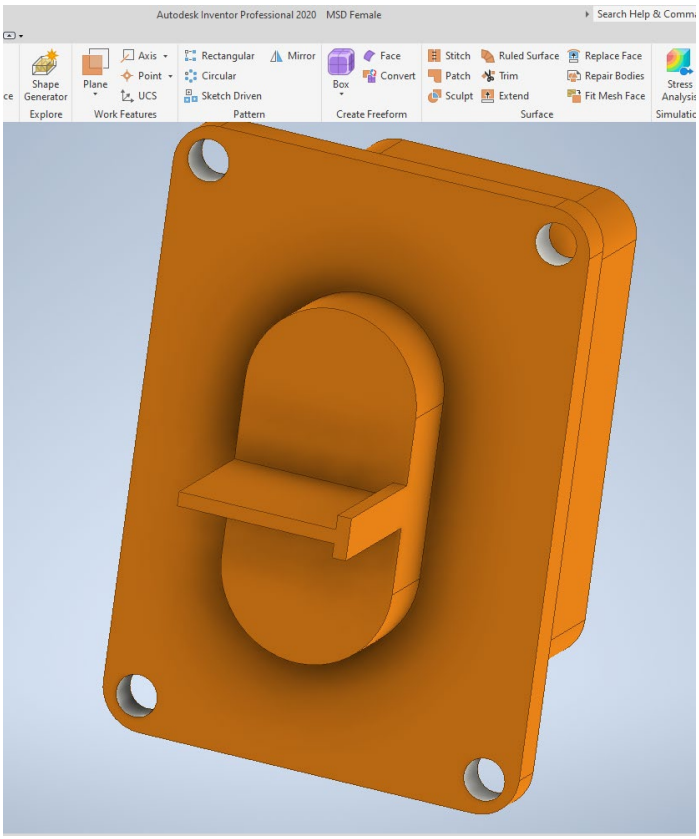

31. Draw CLs, either side – x2 15 mm Circles with a 4 mm offset either side of the Centre Line.

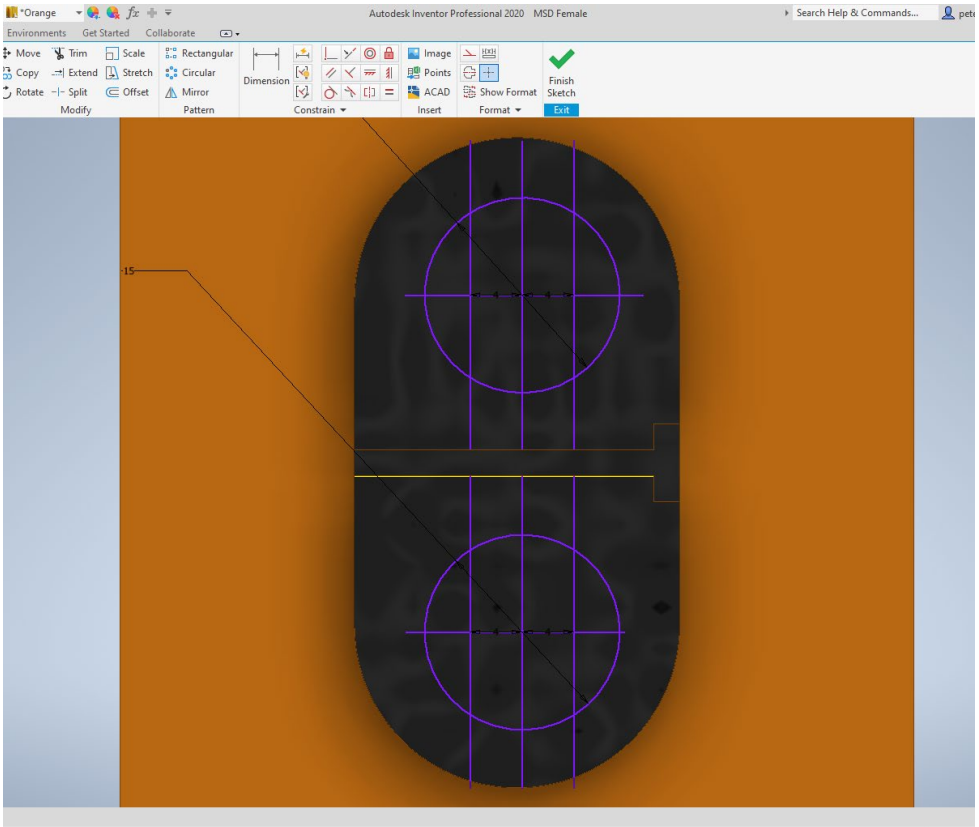

OGL National Composite Centre 2022
This ELEC217 Electric Virtual Prototype Builds content is licensed under the Open Government Licence 3.0

32. Trim up for DC Connection pins.

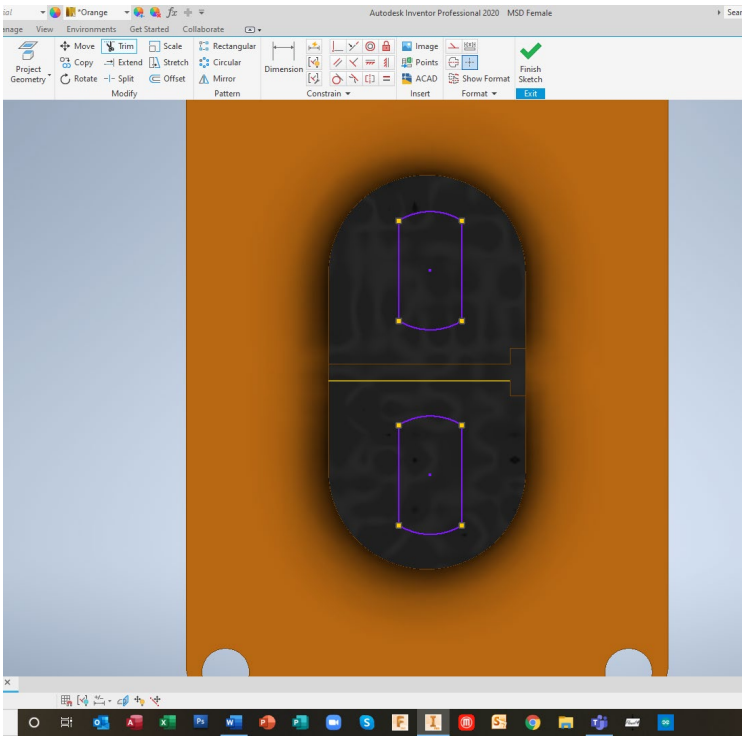

33. Extrude the pins 20 mm.

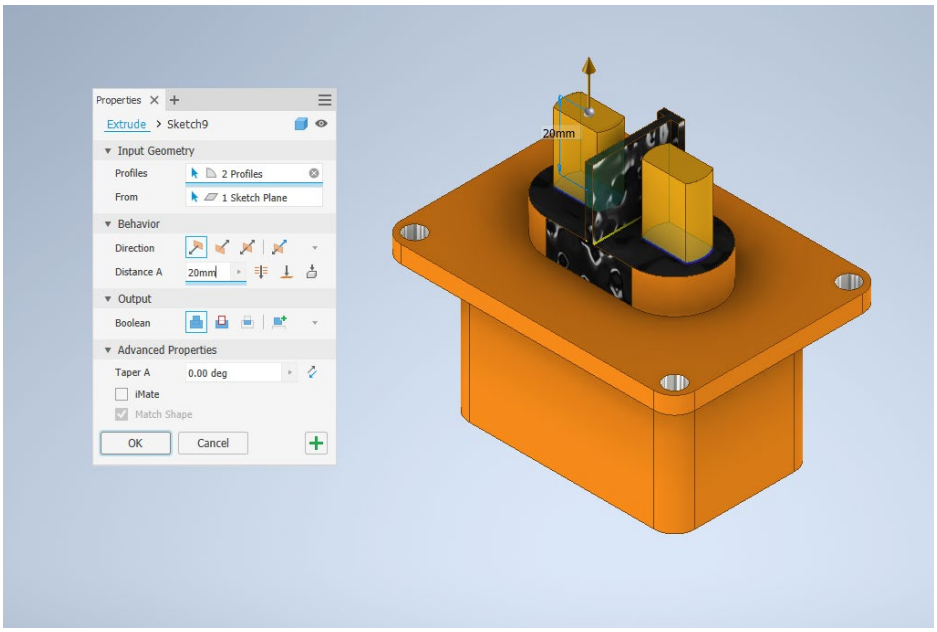

OGL National Composite Centre 2022
This ELEC217 Electric Virtual Prototype Builds content is licensed under the Open Government Licence 3.0

34. On pins – 6 mm down – 6 mm Circle to extrude cut.

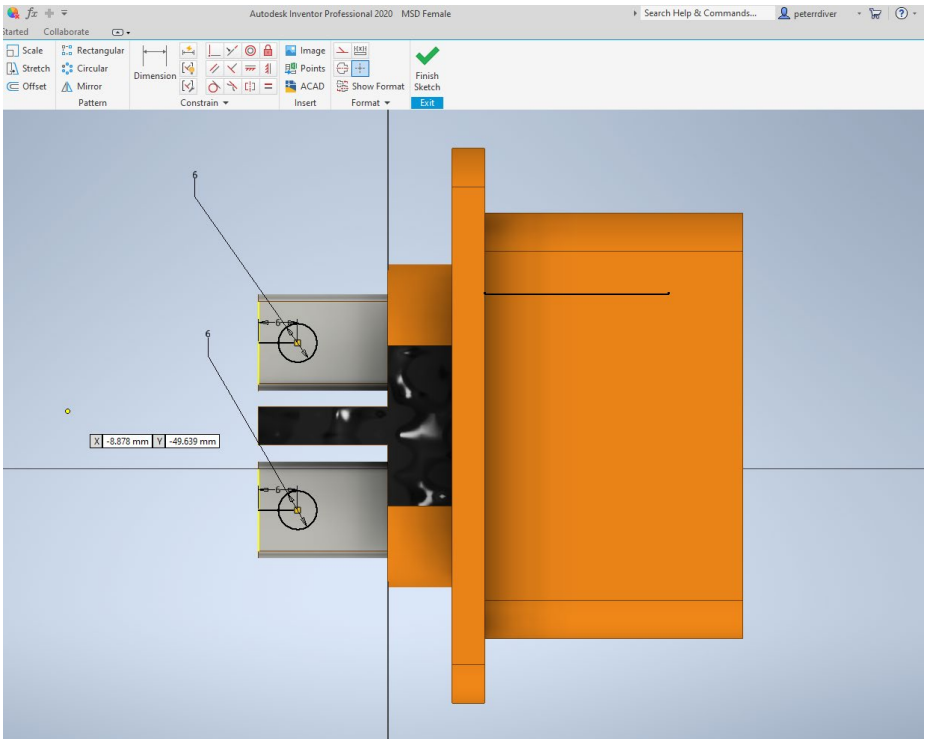

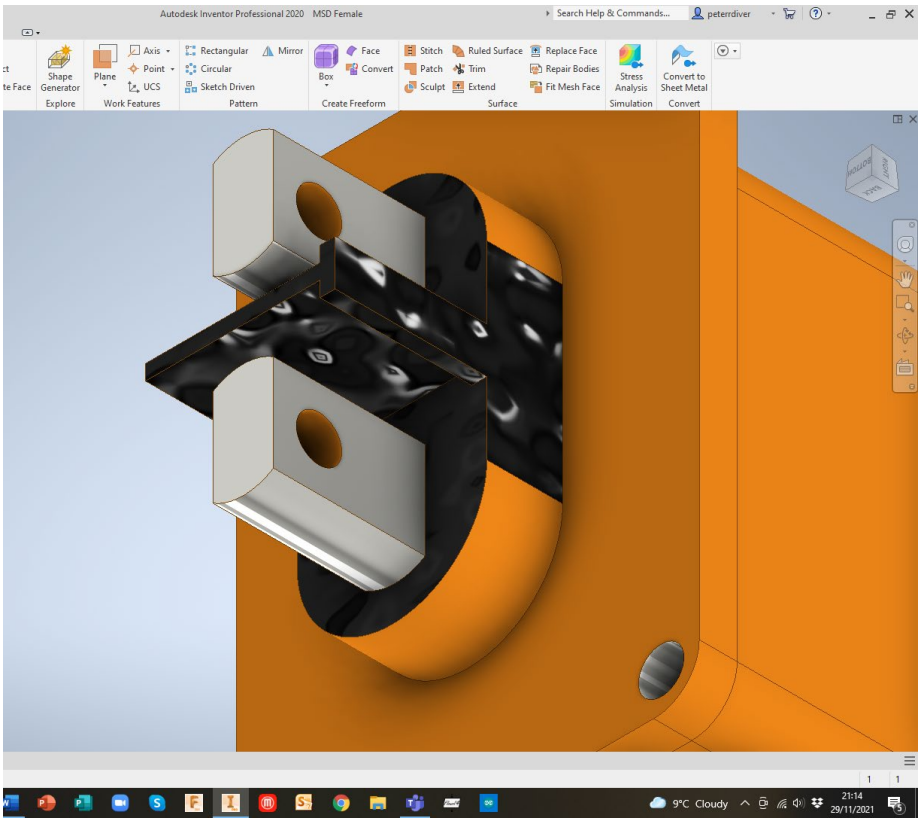

OGL National Composite Centre 2022
This ELEC217 Electric Virtual Prototype Builds content is licensed under the Open Government Licence 3.0

35. Using 3D Model > Thread – add M6x1 thread to both holes – individually.

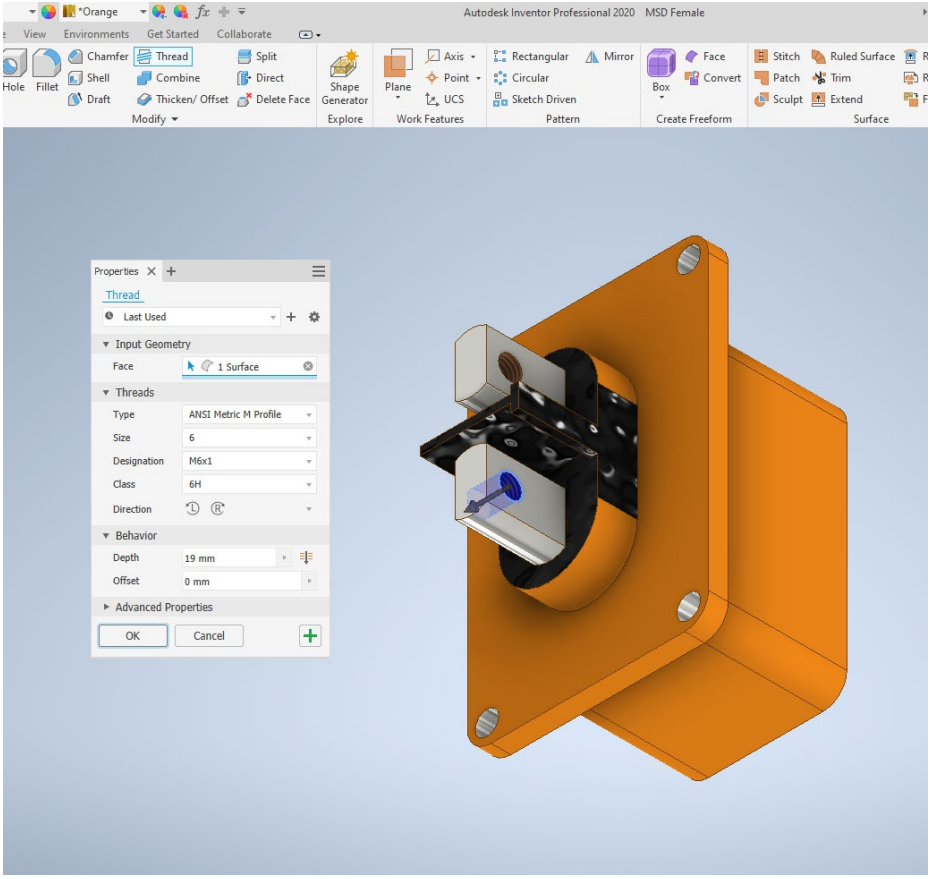

OGL National Composite Centre 2022
This ELEC217 Electric Virtual Prototype Builds content is licensed under the Open Government Licence 3.0

36. END

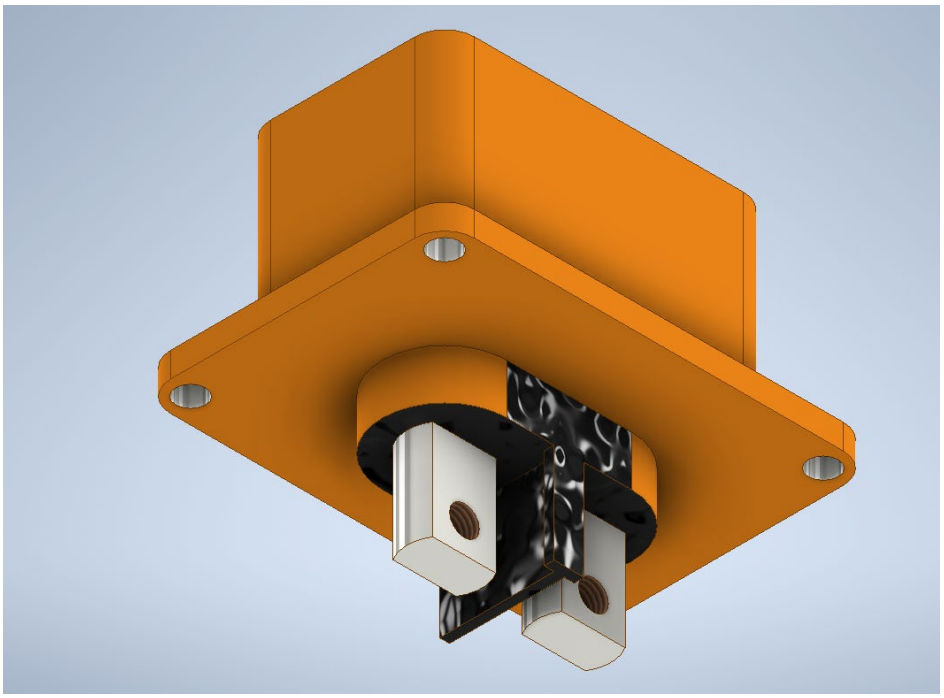

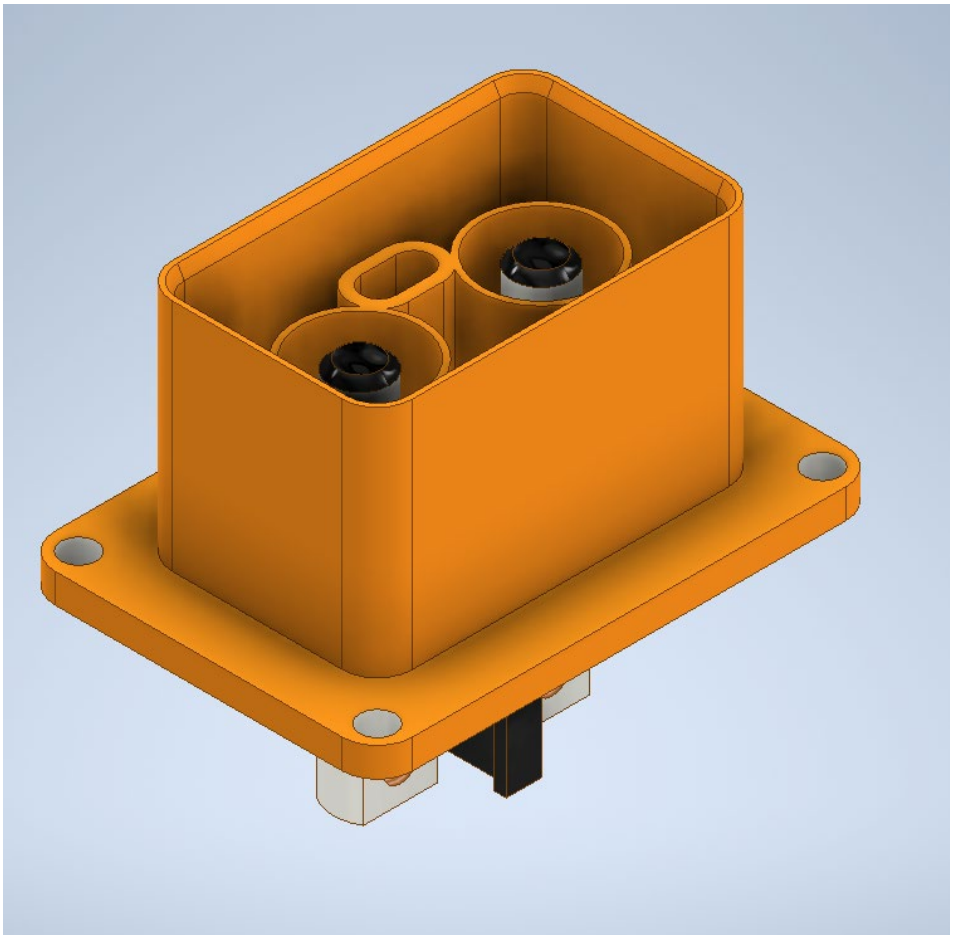

OGL National Composite Centre 2022
This ELEC217 Electric Virtual Prototype Builds content is licensed under the Open Government Licence 3.0